Australian Technical Production Services

Small Desk Supply rev 2 (SDP2B)

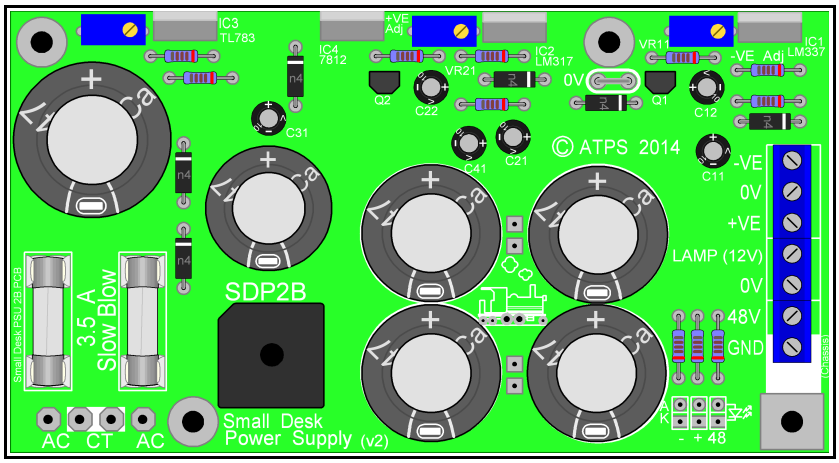

Copyright notice.
These notes, the design, schematics and diagrams are Copyright © Richard Freeman, 2012, 2013, 2014, 2015
While I am happy for the notes to be printed, and copied for personal or educational use, they may not be used in any other publication, or published on any other website without written permission.
Further information may be found at **www.atps.net**

Revision history: SDP_2A rev 1b
13/02/2015 -add notes on Complementary rail shut down, 9/06/2015 -Corrections
02/12/2017 Correct values of R31, R32 and VR31
23/01/2021 Corrected Complementary rail shutdown description to refer to R13, and R23

Credits
This Article contains contributions by: Richard Freeman

Table of Contents

Small desk supply....2
Circuit description....2
Squirting noise into your earth....4
Voltage selection....4
A few words about notation....5
Construction....6
Layout....6
Parts locator....6
Assembly....7
Connecting the LEDs....7
Regulator mounting....8
Transformer....8
Choosing Transformer Voltage....9
Choosing Transformer VA....9
Heat-sink requirements....10
Trimming and Adjustment....11
Grounding....11
Ground lifting....11
Parts list....14
Hardware....14
Inside Template....15

Small desk supply

This is an updated version of the small desk supply, the board is bigger than the previous version, but the trade off is, there have been a few improvements.

An error in the PCB overlay has been corrected which showed C12 the wrong way around.

Layout has been improved, so that a screwdriver can easily reach the head of any screws holding the voltage regulators in place. I had been assembling my power supplies on a bracket, so inserting countersunk screws from behind was not a problem for me, but it did occur that other constructors might want to do things differently.

I have added complementary rail shutdown/Tracking circuitry as per the original CPS150. This means that if you lose one rail (due to a short or a fault) the other rail shuts down. I have repaired many consoles where one rail has failed without causing further damage to the console so I was debating whether to add this feature or not, but as it is included in the CPS150 I figured Soundcraft might know something I didn't (and besides if you do not want this feature, you can simply leave the associated components out).

I have also made provision for a trimpot, to allow the supply rails to be adjusted, alternatively if you prefer a fixed resistor may be used if you do not want the extra trouble and expense.

Finally I have included protection diodes on the Regulators. These are unlikely to be needed in normal usage as the decoupling capacitors inside the console will usually discharge much more quickly than main capacitors in the power supply, but as I am not across every application that these are being used for it is probably a good idea to be more cautious.

The supply uses a voltage multiplier to generate the 48 volt supply so a readily available 15-0-15 Volt transformer (see notes on choosing a Transformer) may be used.

While specifications ultimately depend on the Transformer and heat-sinking used, the power supply is capable of delivering up to:

Rail	Current	Description
+12V	**1 A**	**Lamp/light supply**
+17V (adjustable 14-19V)	**1.5A**	**Audio Supply**
-17V (adjustable 14-19V)	**1.5A**	**Audio Supply**
+48V	**0.5A**	**Phantom power**

Circuit description

The circuit uses standard run of the mill voltage regulators, with a TL783 for the 48 volt supply, and a LM317 and LM337 for the main positive and negative supply rails.

IC1 and IC2 are the negative and positive voltage regulators the output voltage is determined by R11 and R12 for the negative rail and R21 and R22 for the positive rail using the formula:

Vout = 1.25 x (1+ Rx2/Rx1).

I have placed the trim-pots in series with R21,11 and R31 instead of the traditional placement in series with the “Voltage programming” resistor.(R22,12 and 32) . In the event of noise (if you should incautiously adjust it with a console connected) or a failure on the potentiometer wiper, this will result in the voltage regulator dropping to minimum output (about 1.25V) whereas a failure in series with the programming resistor would result in regulator output going to the full unregulated supply voltage.

While the TL783 is rated at 750mA I found that in this circuit, ripple and hum reach unacceptable levels above 600mA or so. However 500mA should be more than enough to provide phantom power for 24 channels (while a shorted channel will draw 17mA from the phantom power supply, most devices/microphones draw much less than 10mA, typically 2 or 3mA).

Under test the LM317 and LM337 happily provided a clean, rock steady supply, up until they shut down due to over current at over 1.5 Amps.

To minimise current variations through the Adjust pin (which would decrease regulation) adjustable regulators are designed to sink most of their operating current via the output pin, this means that in order to maintain regulation they need a minimum load. While this is mostly included in the voltage divider calculations (for the adjust pin), it is also provided by the indicator LEDs, so as odd as it may seem, the indicator LEDs may be required for stable operation.

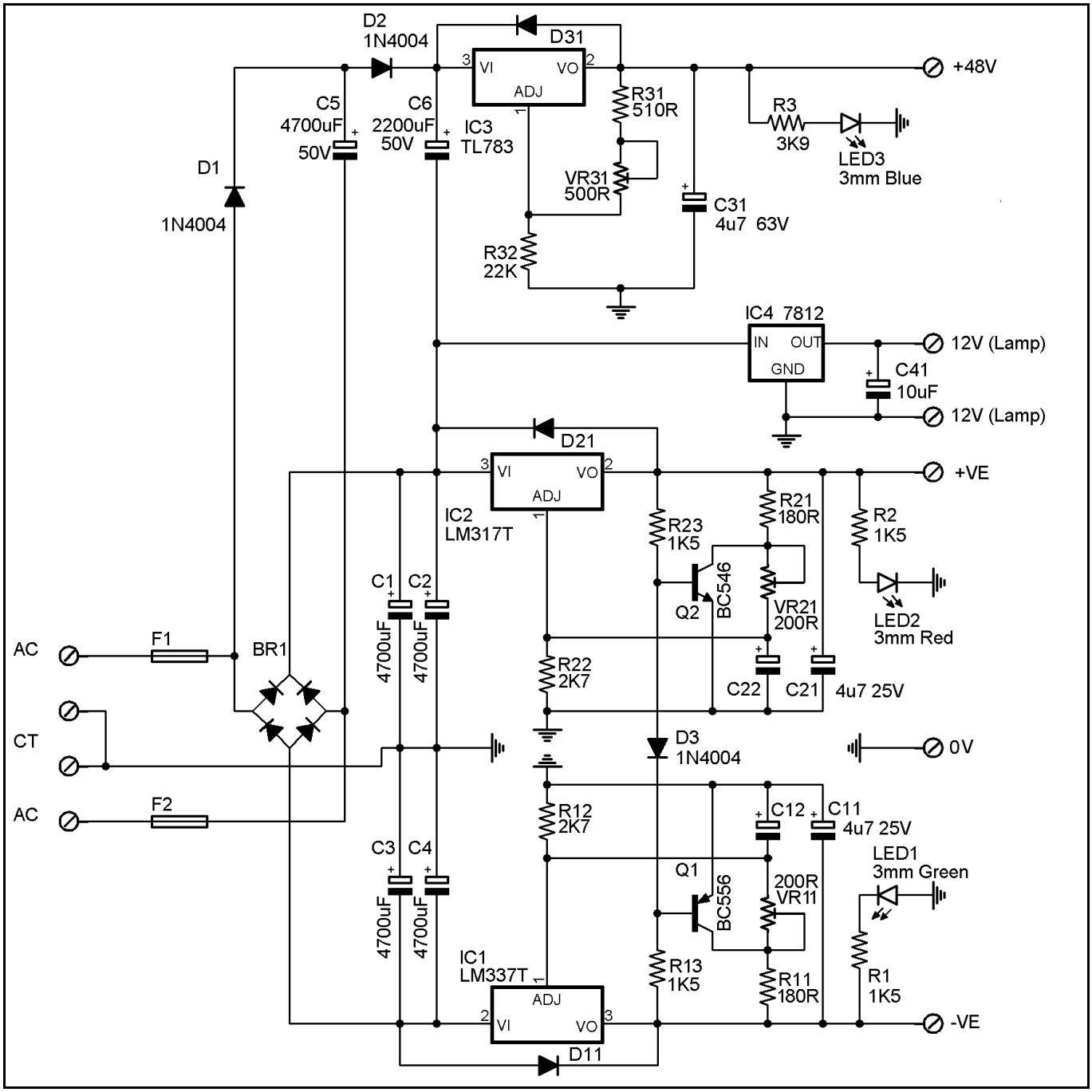

Voltage multiplier consists of D1, D2, C5, C6 and (C1 and C2)

If we presume a 30V centre tapped supply, on the first half cycle (i.e. the upper AC input is positive and the lower Negative) C5 charges via D1, up to 42.3V (30V×1.414) on the second half cycle (lower AC input going positive) the negative terminal of C5 goes to 21.21V – now D1 is off but D2 conducts, discharging C5 into C6 so that the positive terminal of C6 charges up to somewhere approaching 63.5 Volts while the multiplier does have a lot of ripple, this more than enough to provide our 48 volt rail.

Complementary Rail shut down consists of Q1, Q2, R13, R23 and D3

With both supply rails balanced (at roughly equal voltage) the voltage at the junction between R13 and R23 (ignore D3 for the moment, treat it like a short circuit) is 0V. So Q1 and Q2 are off.

However if one rail (say the negative rail in this example) fails (due to a short circuit or regulator failure)

the resistor divider will now be between the working (positive) supply rail and 0V, the junction will now be at half of the working supply rail, which will turn the associated transistor (Q2) on, this in turn will pull the adjust pin to the 0V rail, dropping the output voltage to its minimum output voltage of around 1.2 Volts (so to most practical intents is effectively shut down).

Values for Q1 and Q2 are not critical and any transistor with an ^{h}FE of around 100 and ^{V}CE of 40V or more will be suitable, for example BC556 and BC546.

Note to trim the supply you will find this circuit will go some way to balancing the two rails by pulling the higher rail down. So for adjustment purposes you will need to disable this circuit.

To disable this feature for the purposes of adjusting the output voltage, short circuit each end of Diode D3 to ground. There is room for a link next to D3 marked as 0V for this purpose as shown in the picture above.

Squirting noise into your earth.

One thing you need to take care of is ensuring that any earth used for signal references do not have current flowing through them as this current flow will cause a voltage drop across the earth, resulting in noise. This is where the concept of star Earthing comes from, this is where each part of the circuit has a separate track back to a common earth point which is not shared with any other circuitry.

The worst noise current source is the supply decoupling capacitors, ironically intended to reduce noise in the power supply. This is because linear voltage regulators (such as the ones used in this project) are high gain amplifiers which essentially work by comparing the output voltage with a reference voltage. When the output drops below the reference the regulator turns the output on, if the output exceeds the reference the regulator turns the output off.

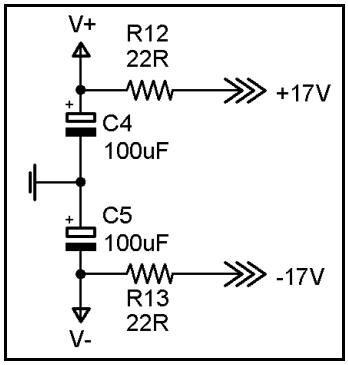

This means that the output of a voltage regulator can potentially be very noisy and this is what capacitors C11, C21, C31 and C41 are for, to smooth out this noise.

While this noise voltage may only be in the order of millivolts the current through any decoupling capacitors can be in the order of amps which can result in significant noise on any earth tracks particularly is we are dealing with microphone level signals.

The good thing is that as we are talking millivolts of noise on the supply, almost any resistor in series will reduce this noise current to negligible levels which is why most mixing desks decoupling circuits use resistor as well as capacitors, as shown in the diagram on the left.

Voltage selection

This board has been designed to use 25 turn trim-pots to allow for adjustment of the output voltage as shown here:

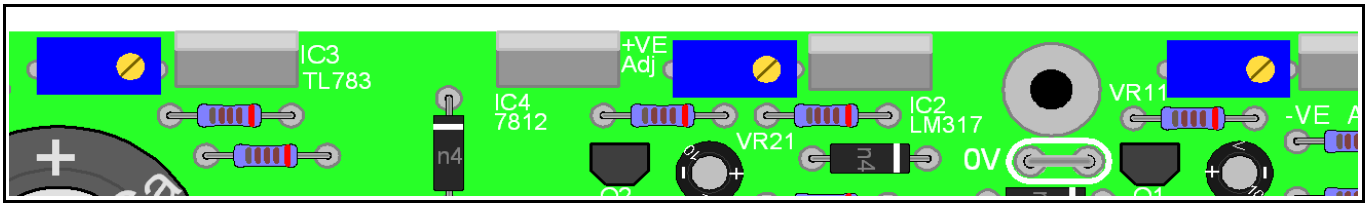

Using 100Ω Trim-pots (as specified) for VR11 and VR21 allow adjustment between 14 and 20 Volts, or if you want a greater range, 200Ω will allow adjustment between 11 and 20V.

Note that if you elect to use Trim pots to make the power supply adjustable you need to disable the Complementary shutdown circuitry (as shown previously) to adjust the voltage regulators as otherwise this will interfere with voltage adjustment.

Provision has also been made to fit fixed resistors in place of the trim-pots if you would prefer a fixed voltage design.

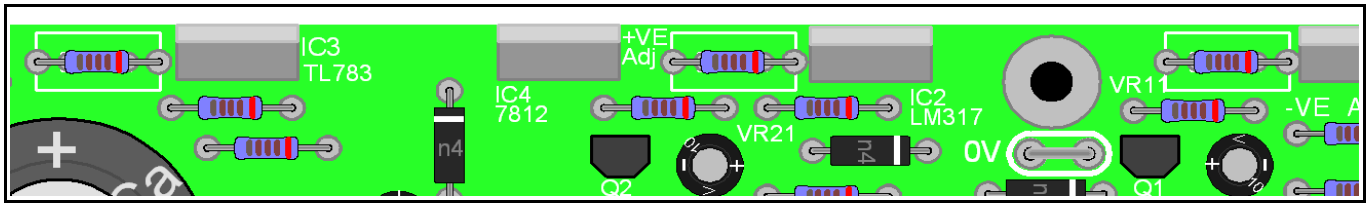

If you are going to use fixed resistors, VR31 will need to be 8.2Ω for the 48V supply. While VR11 and VR21 will need to be 150Ω for 12V (12.5V), 68Ω for 15V, 54Ω for 16V and 47Ω for 17V.

A few words about notation

you may have noticed on the schematic I use component values like 4u7, 2K2, 8R2 and 51R, so what's this about?

In the 'old days' of paper schematics, (yes OK I still prefer to work off print outs, I must be a follower of the great Ned Lud) diagrams could knock about a workshop for some time getting dirtier and more tattered as time went by, or alternatively would be photo-copied time and time again (and indeed some of the schematics in my library are copies of copies of copies). This meant that after a while, it would become difficult to distinguish small, but vitally important characters such as the decimal point (**.**) form everyday wear and tear dirt or just noise in one of the copies. To get around this it was decided to replace any decimal point with the multiplier.

So 2,200 Ohms becomes 2.2 K Ohms, then we replace the decimal point with the multiplier (in this case K) and get 2K2 Ohms. Since resistors are usually measured in Ohms, the word ohms (or the symbol Ω) is redundant and only takes up valuable real-estate we drop it and end up with 2K2.

Likewise with Capacitor values, 4.7uF changes to 4u7F, and then we drop the redundant F to end up with 4u7.

So what about 51R? Well, firstly the standard ASCII character set does not include the Ω symbol, so R is often used instead to denote Ohms (much like u is used instead of µ or mu), next Resistors frequently have values greater than 100Ω so we need to clarify that that this is 51 Ohms, rather than say, 51 KΩ so this is an exception to the dropping the unit of measurement rule above.

Likewise 8R2 is 8.2Ω but since we have no multiplier and cannot print an Ohms symbol (in the modern, I mean 1990es era), R is used instead.

Construction

Layout

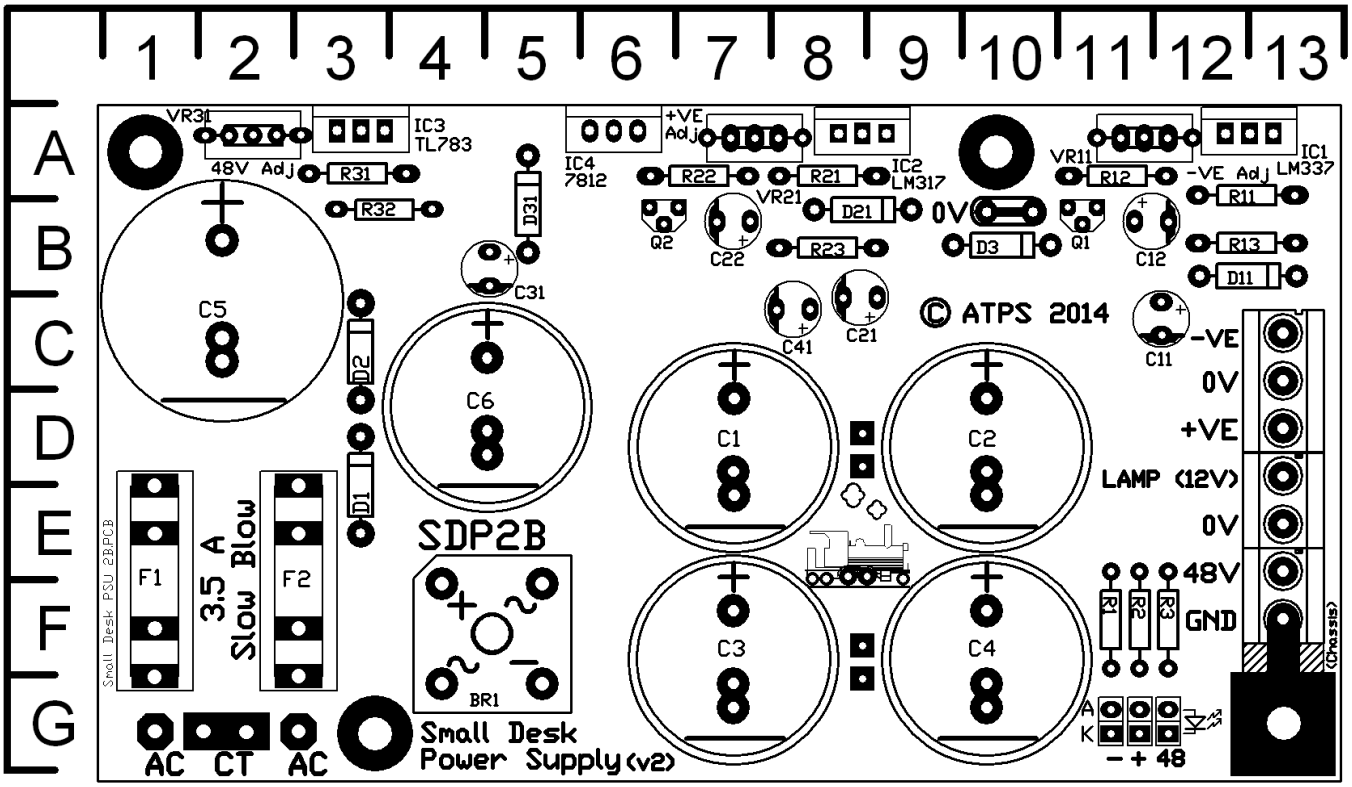

The circuit fits on a single PCB, with the voltage regulators across one edge so that the Heatsink can be attached to the outside of any case or bracket. Connections are across one side of the PCB and LEDs can be mounted off board using jumper wires.

Parts locator

Sorted by Value, components marked with asterisk are optional (see Complementary Rail shut down)

Part	Location	Description		Part	Location	Description	
R31	A3	510R		C4	F10	4700uF 35V	NB Polarity
R11	B12	180R		C5	C2	4700uF 63V	NB Polarity
R21	A8	180R		F1	F1	M205 3.5A slow blow	
R1	F11	1K5		F2	F2	M205 3.5A slow blow	
R2	F11	1K5		BR1	F4	Bridge Rectifier BR605, BR610	
R13 *	B12	1K5				or similar	NB Polarity
R23 *	B8	1K5		D1	E3	1N4004	NB Polarity
R32	B3	22K		D2	C3	1N4004	NB Polarity
R12	B11	2K7		D3 *	B10	1N4004	NB Polarity
R22	A7	2K7		D11	C12	1N4004	NB Polarity
R3	F12	3K9		D21	B8	1N4004	NB Polarity
Q2 *	B6	BC546		D31	B5	1N4004	NB Polarity
Q1 *	B11	BC556		LD1	G11	3mm Green LED	NB Polarity
C11	C11	4u7 25V	NB Polarity	LD2	G11	3mm Red LED	NB Polarity
C12	B11	4u7 25V	NB Polarity	LD3	G12	3mm Blue LED	NB Polarity
C21	C8	4u7 25V	NB Polarity	IC1	A12	LM337T	NB Polarity
C22	B7	4u7 25V	NB Polarity	IC2	A8	LM317T	NB Polarity
C31	B4	4u7 63V	NB Polarity	IC3	A6	TL783	NB Polarity
C41	C7	4u7 25V	NB Polarity	IC4	A3	LM7812	NB Polarity
C6	D4	2200uF 63V	NB Polarity	VR11	A11	100Ω 25 turn	(or, see notes)
C1	D7	4700uF 35V	NB Polarity	VR21	A7	100Ω 25 turn	(or, see notes)
C2	D10	4700uF 35V	NB Polarity	VR31	A2	500Ω 25 turn	
C3	F7	4700uF 35V	NB Polarity				

The PCB fits on to a bracket made from a 150mm length of 50mm by 80mm extruded angle aluminium at least 2.5mm thick, or be mounted directly on your case metalwork, as per the diagram on the following page. If significant current is being drawn, the regulator will need additional heat sinking as described in the section on Heat-sinking requirements

Assembly

While most projects suggest you mount your semiconductors last in order to avoid any thermal damage The voltage regulators used in this project are fairly rugged I strongly suggest that you start by mounting the board in your case (or on your bracket), then bolt the TO220 devices in place and solder the outside pins of each device from the top of the PCB (which you can do as it is double sided) note you will need a fine tipped soldering iron to do this (note picture is of the earlier version, but the basic idea is the same).

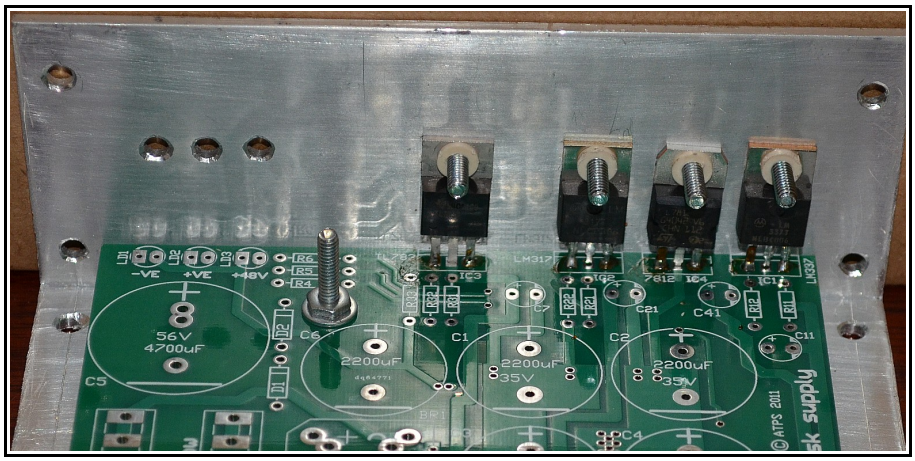

This will ensure that the devices line up properly, the lead length is correct and it will make life a lot easier when it comes to final assembly.

Remove the board from the case and finish assembly by next inserting all the low lying parts such as the Resistors and Diodes.

Then solder in the Bridge rectifier and Fuse clips. When soldering in the fuse clips it is a good idea clip in an old M205 fuse before applying solder as this will ensure that you have the fuse clips the right way around and also keeps them lined up while soldering.

Finally fit the Electrolytic capacitors, starting with the smaller ones and finish with the larger ones (it is a lot easier to solder the other devices to the board without the large capacitors in the way).

Wires can be soldered directly to the PCB, or you you could use screw terminals if preferred. Direct soldering saves a few dollars and potentially increases reliability as screw terminations may be prone to loosening in a high vibration/movement environment such as may be found on the road.

by using countersunk screws to attach the Voltage regulators to the bracket (or case), a Heatsink may then be bolted onto the bracket (or case) directly over the top of the screws. Alternatively with this version holes may be tapped into the Heatsink for the regulator mounting bolts.

Connecting the LEDs

As a general rule, I try to avoid off board wiring as much as possible, however any LEDs mounted directly on the PCB would have been obscured by heat sinking, so the Rail indicator LEDs will need to be wired as per the diagram here (of course you may choose different colours to those shown).

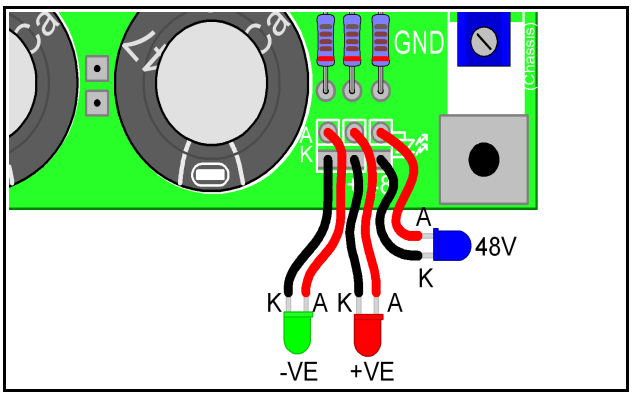

Regulator mounting

The regulators will need to be insulated from the heatsink or case using either Mica washers or Silicone pads. I would suggest Mica washers for higher performance applications, however in this case either will be adequate.

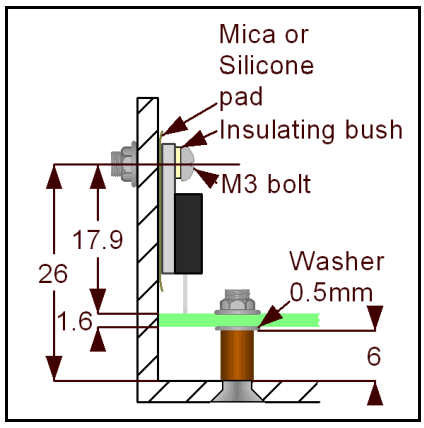

If using mica washers you will need to apply a thin smear of heatsink compound either side of the washer, this is not a case of more is better and only needs to be a thin smear, enough to fill any little gaps between the regulator and the washer or the heatsink and the washer.

Also you will need to use an insulating bush between the bolt and the Regulator, the bolt will need to be an M3 or 4-40 UNC bolt, as regular 1/8 bolts usually do not fit through a TO220 insulating bush.

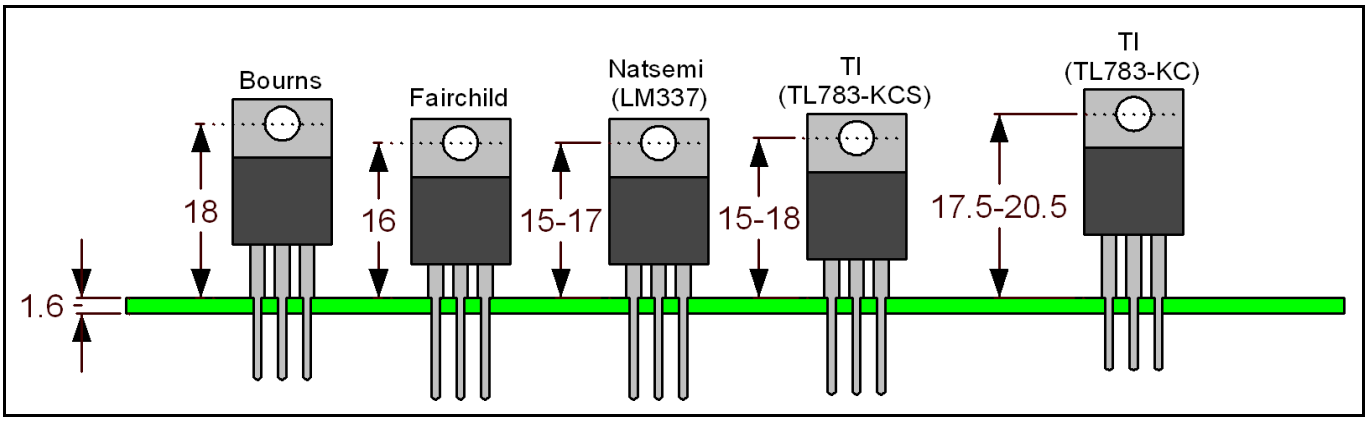

This diagram shows the measurements used for the template with 17.9mm between the top of the PCB, and the mounting hole for the TO220 regulator. Various Data sheets I looked up, showed that this varied from 15mm to 20.5mm, with the TI data-sheet listing two possible variations of TO220 package (KCS and KC) covering (between them) the entire range. Since most devices I have seen would be covered by 15-18mm variations, the diagrams, Templates and layouts in these notes presume17.9mm but you may wish to double check this before drilling out metal work etc.

Transformer

Either a dual wound or centre-tap transformer may be used.

The different options are shown here, note your transformer may not use the same colour code as shown, so you will need to confirm the windings before connecting.

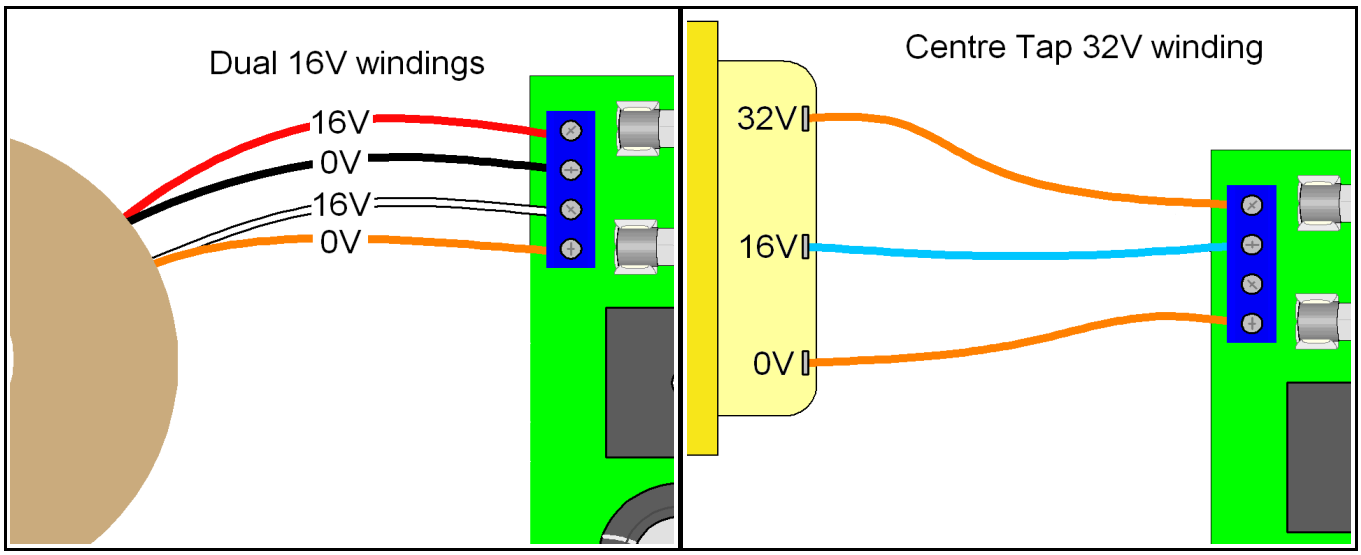

Note that the Centre tap diagram shows the transformer windings labelled 0-16-32 which seems to be the way most transformers are labelled (at least according to a quick, very unscientific survey I conducted of

Transformers I had lying around), but they may also be marked 16-0-16 where 0 is the centre tap and 16 is the end of the winding.

While I have shown PCB mount screw terminals in these pictures, the Transformer winding may alternatively also be soldered directly to the PCB.

Choosing Transformer Voltage

Your supply Transformer needs to be at least 15V for a 17 Volt supply. the reason it can be so low, is that filter capacitors charge up to peak rather than RMS voltage with the peak from a 15v transformer being 15 x 1.414 = 21.21 Volts, however you then need to allow for a volt or two of ripple and a couple of volts for the regulator.

Keeping the unregulated DC supply as low as practical, means your voltage regulators will run cooler and require smaller (i.e. cheaper) heat-sinks. Power dissipated by the voltage regulator can be calculated by multiplying current times the voltage drop across the regulator.

So for example at 1.5 Amps using a 15V transformer, a 17 volt regulated output will result in (15x 1.414-17) x 1.5 = 6 Watts, however if we use an 18 volt transformer, the regulator would dissipate over twice that power at (18 x 1.414 – 17) x 1.5 = 12.68 Watts.

The risk here is, that this assumes your AC supply is reasonably stable. Since the LM317/337 require up to 2.5V across them in order to function reliably at 1.5 Amps (lower current typically requires less forward voltage) then for 17 Volts output we need an unregulated supply of at least 19.5 Volts, if then add another volt to allow for supply ripple, now we want 20.5 volts on the unregulated side. So a 15V transformer will work fine, until the AC supply drops by as little as 5%.

In Australia AC supply is specified as 230V +10/-6%. So if we go by worst case conditions, a 15V transformer is probably cutting things a bit fine, while a 16V transformer would allow for 10% sag in supply. Using these assumptions above, the chart below gives recommended transformer voltages for commonly required supply rails.

Desired output	Ideal Transformer	Common Transformer	Peak voltage
18V	16.2V	18V	30V
17V	15.4V	18V	30V
16V	14.6V	15V	25V
15V	13.9V	15V	25V
12V	11.6V	12V	20V

So for example if you only require +/-16V rails, then the ideal transformer would be 2 x 14.6V (or 29.2V Centre Tapped) but it is unlikely you will find an off the shelf Transformer of this voltage so you would choose the next commonly available transformer which would be 2 x 15V or 30V CT.

Choosing Transformer VA

Transformer power ratings are measured in VA, while this takes into account current and voltage phase differences in a simplified practical sense we can simply multiply our current requirements by the secondary voltage to get the required VA. So we need to work out how much current we are going to draw from the Transformer. Maximum would be:

+/-rails	= 1.5A
Lamp supply	= 1 A
48V	= 1 A
Total	= 3.5A

So with a 15+15 Volt transformer this would be 3.5 x 30 = 105VA while with an 18+18 Volt transformer it would be 3.5 x 36 = 126VA (or greater). Of course if you do not implement the Lamp supply this would be 2.5 x 30 = 75VA and 2.5 x 36 = 90VA

Heat-sink requirements

The total power dissipation is the sum of the power in all of the regulars, so assume worst case (maximum current draw on all rails and 10% mains Over-voltage) and for the sake of this exercise I am going to assume an 18V Transformer is being used.

First we need to work out what voltage to expect on the unregulated supply rails, this will be slightly less than the peak voltage from the Transformer;

$VDC_{\mathbf{unreg}}$ = 1.414 x AC_volts x 110%

So for an 18V transformer this would be 18 x 1.414 x 1.1 = 28 volts. Normally you would add another 10-15% or so, to allow for transformer regulation, but since we are assuming maximum current draw I am not going to worry too much about Transformer regulation in the heatsink calculations (you do need to add this when calculating filter capacitor voltage rating however, so the main filter capacitors (C1 – C4) for an 18V Transformer need to be at least 32V, while the Filter caps for the phantom power supply (C5 and C6) need to be 64V).

Power dissipation in each voltage regulator = ($VDC_{\mathbf{unreg}}$ – $VDC_{\mathbf{out}}$) x Current draw, so to calculate the power for each regulator:

LM317 and LM337 with a 17V output at 1.5 Amps:

(28-17) x 1.5 = **16.5 Watts**

7812 at 1 Amp

(28-12) x 1 = **16 Watts**

TL783 with 48V output at 0.5Amps – the voltage multiplier potentially produces an 84 V rail, although this has a lot of ripple so the real voltage will be less than this.

(84-48) x 0.5 = **18 Watts**

If we add these up, at full output the Heatsink will need to dissipate 67 Watts.

Now we need to work out the difference in temperature between the regulator Junction and the heatsink

Texas instruments give a figure of 3ºC per watt between the junction and pad of a TO220 device, as the voltage regulators are mounted on an insulating pad we will need to add another 0.5-1ºC per watt (which is why many power amplifier manufacturers try and mount their devices directly on the heatsink) so this gives us a total thermal resistance between Junction and heatsink of 3.5-4ºC/Watt if we pick on our TL783 at 18 watts this means that the junction will be (4ºC/W x 18W) 72ºC hotter than the heatsink the Texas instruments data sheet gives a maximum junction temperature of 150ºC so we want the heatsink to be less than 78ºC for the TL783. The LM317/337 and 7812 however, give a maximum junction temperature of only 125ºC however, so these devices need a lower heatsink temperature of 59ºC and this is the temperature we need to aim at.

The next assumption is where the design engineer can ride a fine line between “rugged, and reliable” or “over-engineered, and expensive” and that is, the expected ambient air temperature.

I live in Australia so generally assume temperatures of up to 40ºC (say an outdoor Gig in Summer, with the power supply sitting in the sun) however if you live in a cooler climate you may get away with a lower temperature.

If we subtract Ambient air temperature from the heatsink temperature, divide the result by the power we wish the heatsink to dissipate, this gives us the required thermal resistance for the heatsink.

In this case (59-40)/67= 0.28ºC/Watt which is actually quite a large (and expensive) heatsink so this is where a bit of engineering thought/compromise comes in to play.

1. The 12V supply is for lights, so this is only likely to be used at night and even in Australia we are unlikely to reach 40ºC at night, however hitting 30ºC is not unknown, so this would allow us to drop the heatsink requirement to 0.43ºC/Watt.
2. This supply is more likely to be used on boards of 24 Channels or less, so it is unlikely we would ever need to draw ½ an amp from the 48V supply, as at 10mA per channel with 24 Channels, ¼ an

Amp is more likely, so this would drop total power dissipation to 58W which now gives us a heatsink requirement of 0.5ºC/Watt.

3. A small inexpensive fan can be fitted if you expect it to be used in more extreme environments, small 40mm Fans can be purchased off Ebay for only a couple of dollars each. While there are too many variables to calculate with any sort of accuracy, a small fan would probably let you get away with a heatsink of more than 0.75ºC/Watt. If noise is an issue, since the fan is only needed in more extreme situations you could add a small thermal switch to the heatsink so the fan only runs when needed.
4. If the power supply is to be used in a studio environment you can drop the assumed ambient air temperature as it would be expected that any Studio environment is air-conditioned, however if the power supply is to be stashed away at the back of an equipment rack somewhere then this could be somewhat warmer than the rest of the air-conditioned room.

The heatsink calculations above, were for worst case scenarios and with an 18V Transformer (which I chose, because they are readily available in Australia), but if you get a 16V Transformer instead, then this would drop your heatsink requirements to 1.1ºC/W.

Trimming and Adjustment

If the supply rails are not closely matched, the complementary rail shutdown circuitry (If you have used it) will try and balance the output voltage of the two regulators by reducing the output of the higher regulator, this obviously is going to cause trouble when it comes to adjusting the supply.

The shutdown circuitry may be disabled by using a test lead to short both the anode and cathode of D3 to the 0V rail, and a handy link has been provided next to the diode for this purpose.

Grounding

As toroidal transformers (as recommended) have the secondary winding wound directly over the top of the Primary winding, they will not be up to double insulation standards so the secondary side will need to be grounded in some way.

So my first recommendation is that the output is grounded with a link between 0V and Mains ground.

Ground lifting

I have seen a potentially deadly system sold for general 'ground breaking' use which use two back to back diodes to break the ground connection while still providing a clamp for any fault scenario. While this system is good in theory, the issue is the amount of current the diodes may be required to handle in a fault condition. In Australia 10 Amp mains circuits typically have breakers of 20 Amps but in some cases may be higher (say a poorly wired 3 phase Distro which may have 45 or 60 Amp breakers) and in the event of an Active to Ground fault, these diodes could have surge currents peaking at hundreds or thousands of amps through them.

While semiconductors will typically fail short, this is not a guaranteed failure mode and also currents of this magnitude are likely to also evaporate the smoking remains of the diode Junction, quickly turning it into an open circuit.

With this project however, we have a controlled environment with an AC mains fuse of around 1 Amp* slow blow so at least we have a known fuse in circuit.

One warning here, you should always assume that Active and Neutral may be swapped, so this means we

want two fuses, one in Active and one in Neutral.

As we have used a slow blow fuse to accommodate surge current from the toroidal transformer any ground clamping diodes will need to be able to handle a surge of at least 10 times the fuse rating.

35 Amp bridge rectifiers are readily available (which will handle typical surge currents of 10-20 times of their rated current, or 300-700 Amps) for only a few dollars, so I would suggest using one of these.

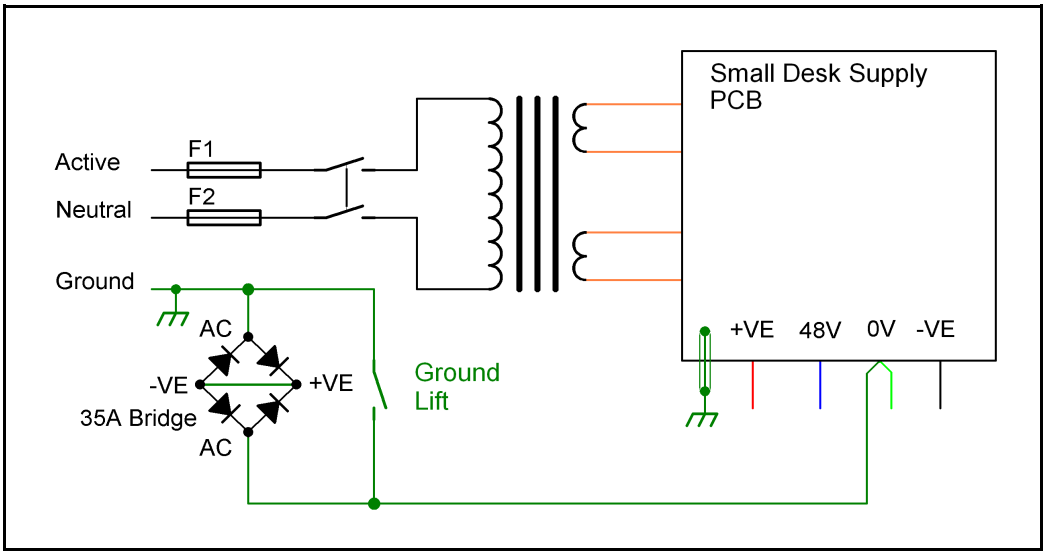

If you wish to take this ground lifted approach, connect the AC terminals of the bridge between mains (and chassis) ground and circuit ground, and then short out the +VE and -VE terminals on the Bridge (as per the diagram below).I just want to emphasise; as mentioned before, if you adopt this arrangement both Fuse F1 and F2 are absolutely essential for safety.

* This assumes 240V, for 110V you would use a 2 Amp fuse.

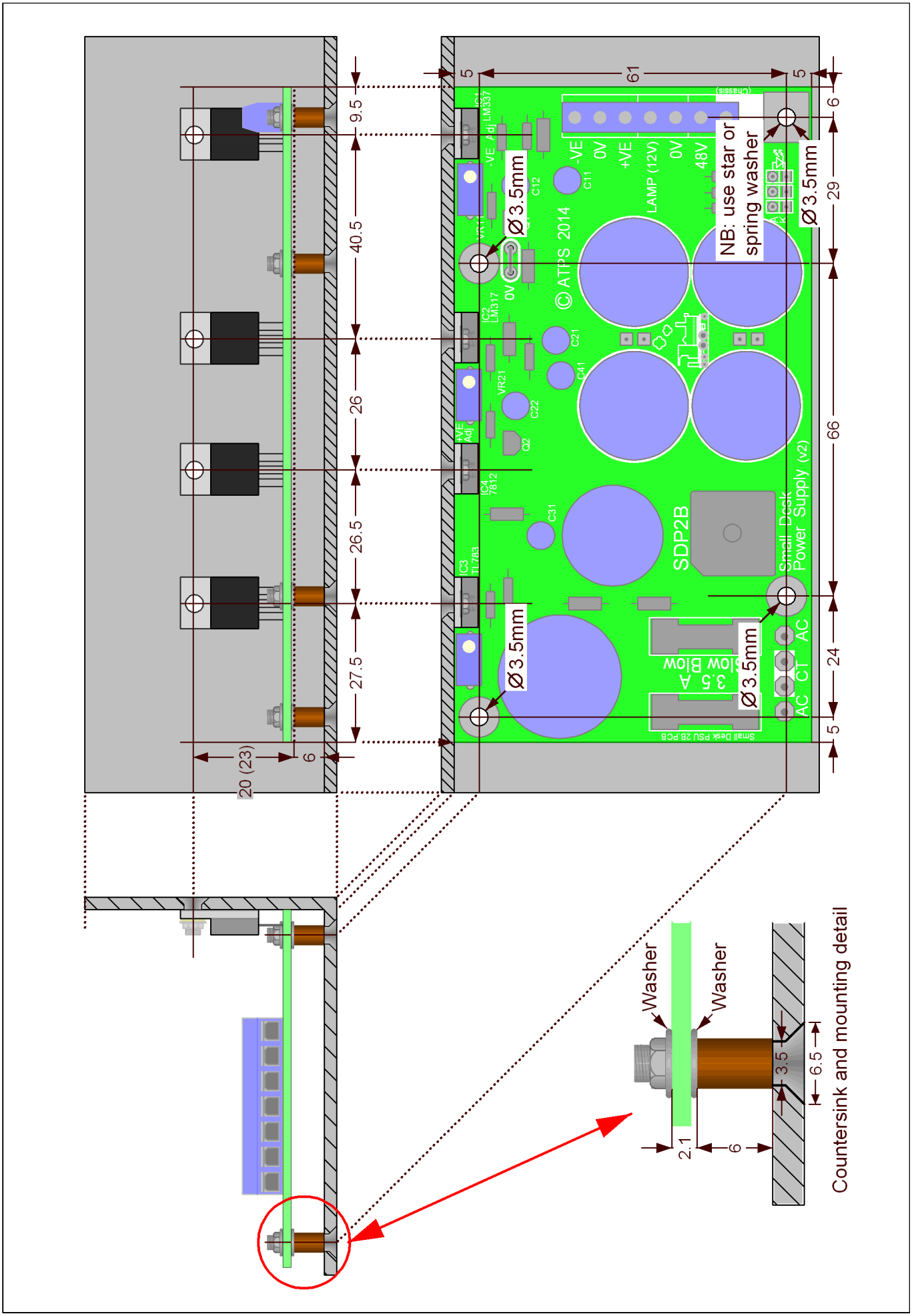

Ø3.5mm
Ø3.5mm
Ø3.5mm
Ø3.5mm
NB: use star or spring washer
© ATPS 2014
SDP2B
Small Desk Power Supply (v2)
Small Desk PSU 2B.PCB
3.5 A Slow Blow
-VE
0V
+VE
LAMP (12V)
0V
48V
AC
CT
AC
Washer
Washer
Countersink and mounting detail

Parts list

QTY	Reference	Description	Notes
1	BR1	BR605 Bridge Rectifier	
5	C11, C12, C21, C22, C41	4u7 25V Capacitor	
1	C31	4u7 63V Capacitor	
1	C6	2200uF 63V Capacitor	22mm Ø, 10mm pitch or 19mm Ø, 7.5mm pitch
4	C1, C2, C3, C4	4700uF 35V Capacitor	22mm Ø, 10mm pitch or 19mm Ø, 7.5mm pitch
1	C5	4700uF 63V Capacitor	25mm Ø, 12.5mm pitch or 22mm Ø, 10mm pitch
1	C6	2200uF 63V Capacitor	22mm Ø, 10mm pitch or 19mm Ø, 7.5mm pitch
6	D1, D2, D3, D11, D21, D31	1N4004 Diode	
2	F1, F2	M205 3.5A Slow blow Fuse	
1	IC1	LM337T	
1	IC2	LM317T	
1	IC3	TL783KC	
1	IC4	LM7812 (If needed)	
1	LD1	Green LED (-VE)	
1	LD2	Red LED (+VE)	
1	LD3	Blue LED (48V)	
1	Q1	BC556 (or equivalent)	
1	Q2	BC546 (or equivalent)	
1	R31	510R 1% Metal film	
2	R11, R21	180R 1% Metal film See notes	
4	R1, R2 R13, R23	1K5 1% Metal film	
1	R32	22K 1% Metal film	
2	R12, R22	2K7 1% Metal film	
1	R3	3K9 1% Metal film	
2	VR11, VR21	100Ω 25 turn trimpot (43Ω - 17V)	
1	VR31	500Ω 25 turn trimpot	

Hardware

QTY	Description	Notes
1	2 way (Blue) 5mm terminal block	
1	3 way (blue) 5mm terminal blocks	
2	2 way (Orange) 5mm terminal blocks	
4	M3 16mm bolt	
7	M3 Flat washers	
1	M3 Spring washer	
7	M3 Nuts (I suggest Nyloc style nuts)	
4	6mm PCB spacers	
1	Bracket (as above) or case	
1	Heatsink (As described in text)	
1	Power transformer (As described in text)	
1	Spade lug for Frame ground – if required	
3	Spring washers	
4	TO220 insulated washers	
4	TO220 insulators	

Inside Template

Note print PDF as “Actual size” DO NOT “Fit” “ Shrink oversized pages” or “Custom scale”.
Use the “Check scale” to confirm that the template has been printed to correct scaling, measure the distance of this scale with a ruler and confirm that it is indeed 100mm in length before using the Template.

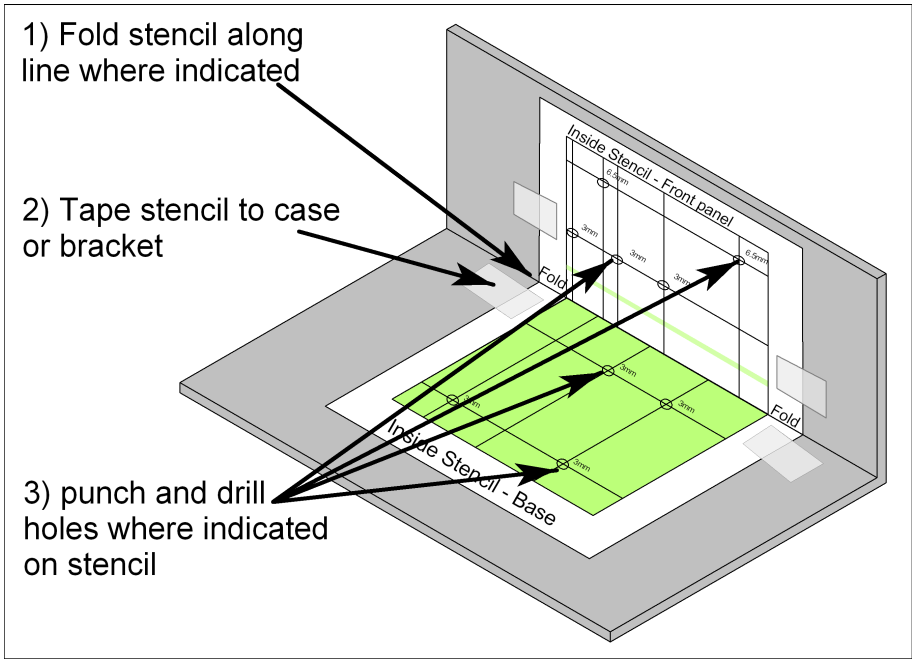

1) Use Check scale and ruler to confirm the template has been printed to the correct scale.
2) Cut out around the template, and fold along line indicated.
3) Tape inside the box or bracket (as shown above).
4) Use a centre punch to mark the centre of the holes, where indicated on the Template and drill holes to specified size.

Replacement or reprint templates are in: www.atps.net/Projects/SDP_2B.pdf

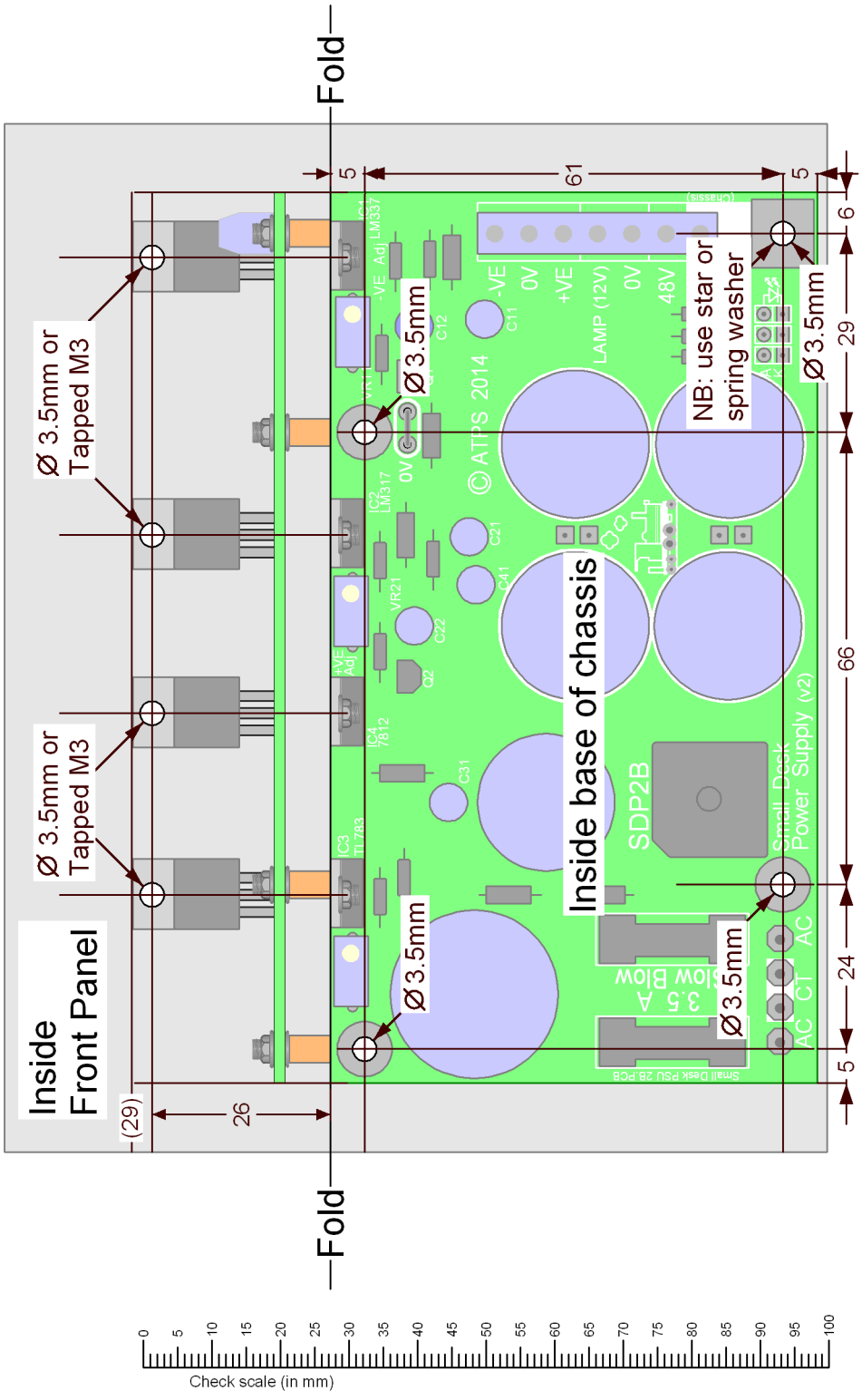
Fold
Fold
Inside
Front Panel
Inside base of chassis
Ø 3.5mm or
Tapped M3
Ø 3.5mm or
Tapped M3
Ø3.5mm
Ø3.5mm
Ø3.5mm
Ø3.5mm
NB: use star or
spring washer
SDP2B
Small Desk
Power Supply (v2)
© ATPS 2014
3.5 A
Slow Blow
LAMP (12V)
-VE
0V
+VE
0V
48V
AC
CT
AC
5
61
5
6
29
66
24
5
26
(29)
Check scale (in mm)